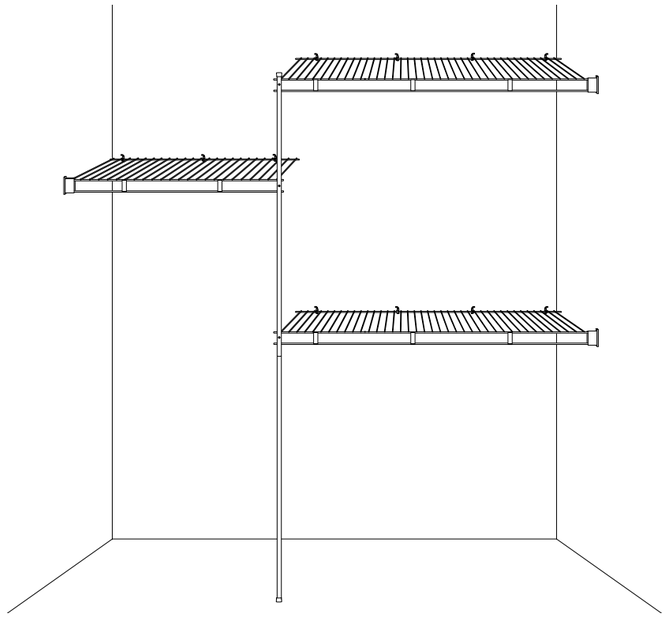

Rubbermaid®

3’-5’ Wardrobe Organizer

5143

A NewellRubbermaid Company

	Letter Lettre Letra	Quantity Quantité Cantidad	Part Number Numéro de la pièce Número de pieza	Description Description Descripcíon
	A	11	1850032	Back Clip Attache arrière Gancho posterior
	B	3	1850082	Wall End Bracket Support de mur Soporte de pared
	C	2	8401846	36” Wardrobe Shelf Étagère de 91,4 cm (36 po) Estante de 91.4 cm (36”)
	D	1	8400898	24” Wardrobe Shelf Étagère de 61,0 cm (24 po) Estante de 61.0 cm (24”)
	E	2	1803099	Pole End Caps Garnitures d’extrémité Puntas de plástico para extremos
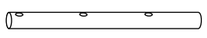	F	1	5139-2W	Upper Support Pole Montant supérieur Montante superior
	G	1	5139-1W	Lower Support Pole Montant inférieur Montante inferior
	H	3	1601691	Machine Screw Vis à métaux Tornillo para metal
	J	3	5577-1A	Pole Shelf Bracket Support d’étagère Soporte de estante
	K	3	1605148	Hex Nut Écrou hexagonal Tuerca hexagonal
	L	18	1800128	Small End Cap Petit embout de sécurité Punta de seguridad pequeña
	M	6	1800649	Extra Small End Cap Embout ultra-petit Tapa de extremo ultra pequeña
	N	17	1608077	Drive Pin Goujon Clavija atornillable

Rubbermaid®

3’-5’ Wardrobe Organizer

5143

Rubbermaid Home Products
Fairlawn, OH 44333-3306
www.rubbermaid.com
1-888-895-2110 L8-5143-P0

A NewellRubbermaid Company

Tools Required:
Tape measure, pencil, 1/4” drill bit, drill, Phillips screwdriver, hammer, hacksaw, straight edge, pliers and level.

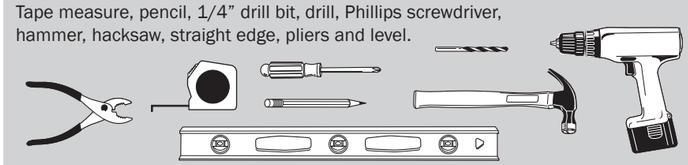

Note: Hardware included is designed for 1/2" drywall. Call 1-800-325-6150 ext. 359 for other applications.

Note: This Organizer is designed for a 59” wide closet. If shelving is cut to fit a smaller closet, reduce number of Back Clips. 12” = 1 Back Clip.

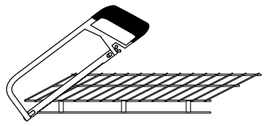

Please check that you have all parts before beginning, and follow the instructions carefully.

1 Mark and drill holes at locations labeled A and B.

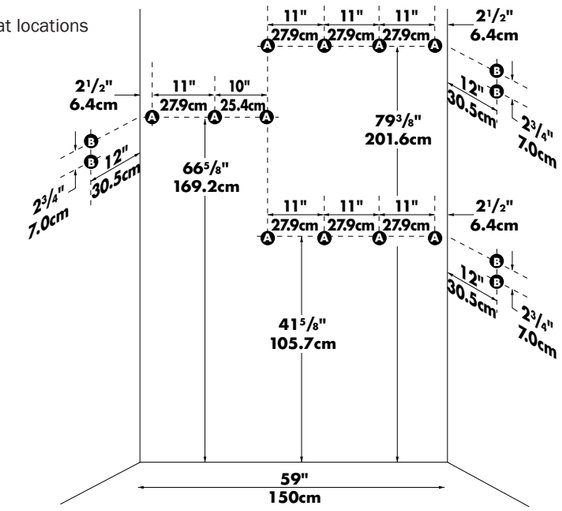

2 Install Back Clips (A) into holes labeled A.
Install Wall End Brackets (B) into holes labeled B.
Gently hammer Drive Pins (N) into wall.

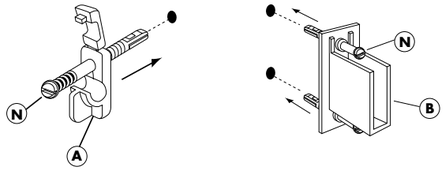

3 Attach End Caps (L,M) to wire shelf ends (C,D).
Snap back edge of shelf into Back Clips and secure flaps.
Lay front edge of shelf into Wall End Brackets.
Ends Caps are provided for ends of cut shelving only

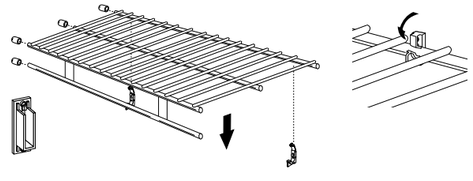
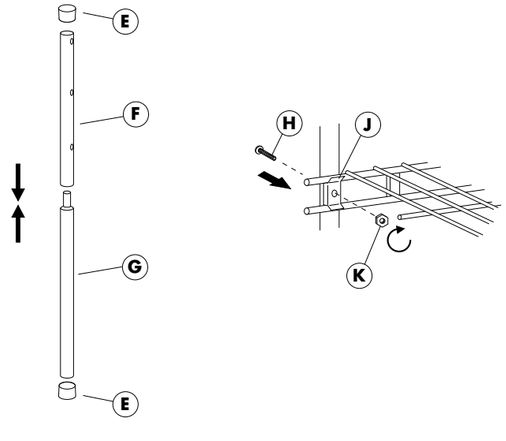
4 Assemble both Support Poles (E,F,G).
Attach front end of shelves to back side of Support Poles with Pole Shelf Brackets (H,J,K).